Audio Cable Configuration for IETF Audio Multicast
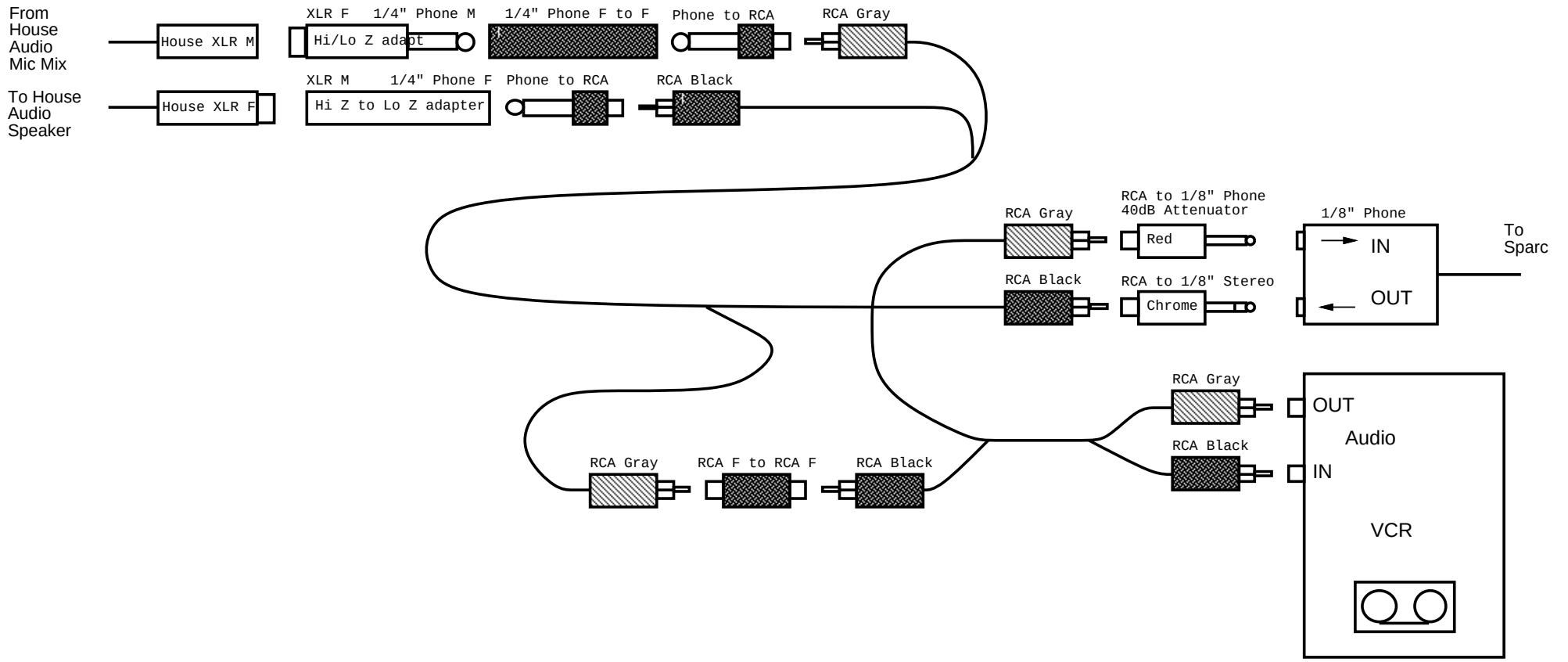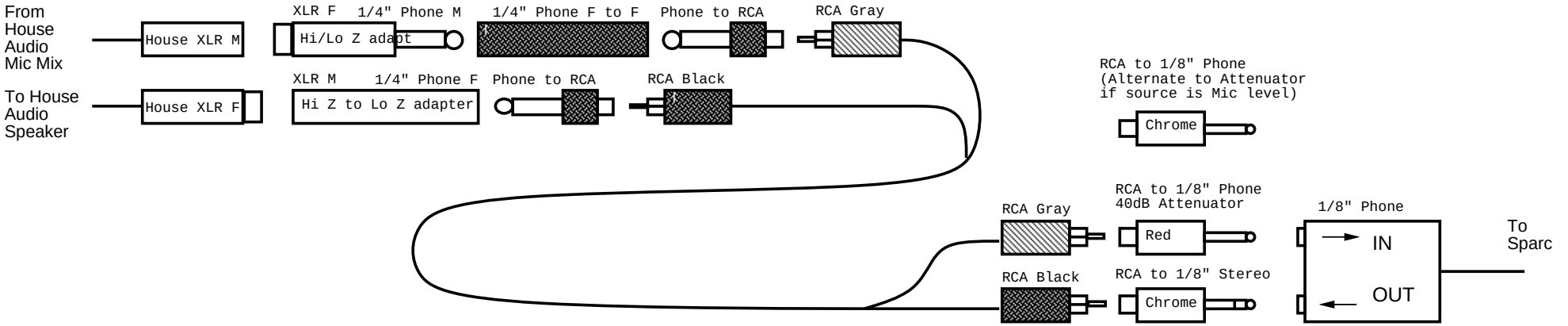
3 December 1992 - CT